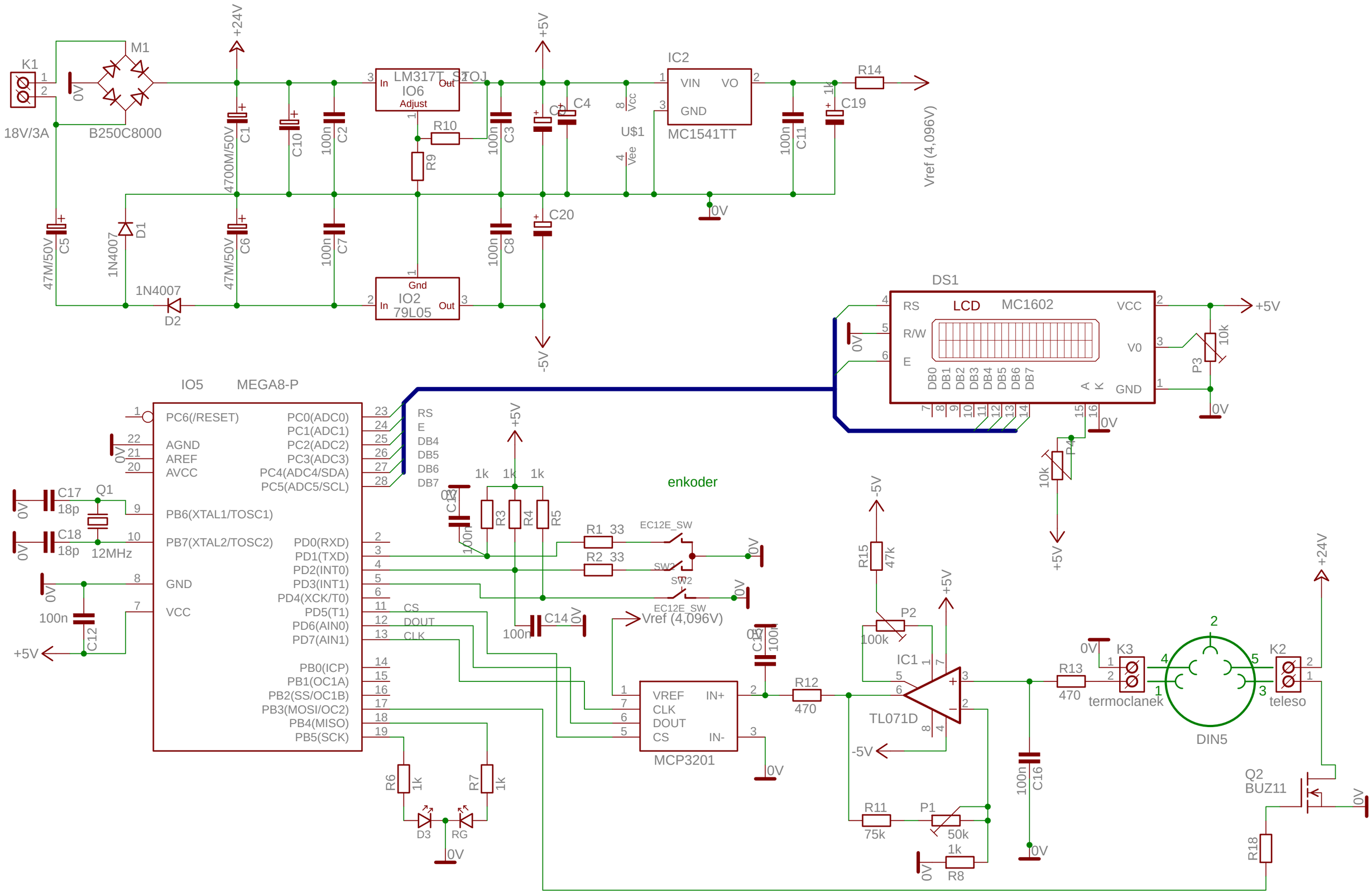
K1
18V/3A
M1
B250C8000
0V
+24V
C1
4700M/50V
C10
100n
C2
LM317T_STOJ
IO6
In
Out
Adjust
R10
R9
+5V
C3
100n
C4
C19
1k
R14
Vref (4,096V)
IC2
VIN
VO
GND
MC1541TT
U$1
Vcc
Vee
C11
100n
C5
47M/50V
D1
1N4007
C6
47M/50V
C7
100n
C8
100n
C20
1N4007
D2
Gnd
IO2
79L05
-5V
DS1
LCD
MC1602
RS
R/W
E
VCC
V0
GND
DB0
DB1
DB2
DB3
DB4
DB5
DB6
DB7
P3
10k
IO5
MEGA8-P
PC6(/RESET)
AGND
AREF
AVCC
PB6(XTAL1/TOSC1)
PB7(XTAL2/TOSC2)
GND
VCC
PC0(ADC0)
PC1(ADC1)
PC2(ADC2)
PC3(ADC3)
PC4(ADC4/SDA)
PC5(ADC5/SCL)
PD0(RXD)
PD1(TXD)
PD2(INT0)
PD3(INT1)
PD4(XCK/T0)
PD5(T1)
PD6(AIN0)
PD7(AIN1)
PB0(ICP)
PB1(OC1A)
PB2(SS/OC1B)
PB3(MOSI/OC2)
PB4(MISO)
PB5(SCK)
C17
18p
Q1
C18
18p
12MHz
100n
C12
CS
DOUT
CLK
R3
R4
R5
R1 33
R2 33
EC12E_SW
SW2
C14
100n
Vref (4,096V)
VREF
CLK
DOUT
CS
IN+
IN-
MCP3201
R12
470
R6
1k
R7
1k
D3
RG
enkoder
R15
47k
P2
100k
IC1
TL071D
R11
75k
P1
50k
R8
1k
P4
10k
R13
470
K3
termoclanek
DIN5
K2
teleso
+24V
Q2
BUZ11
R18
C16
100n